ASSAM POWER GENERATION CORPORATION LIMITED

OFFICE OF THE CHIEF GENERAL MANAGER (HYDRO & CIVIL),

BIJULEE BHAWAN, GUWAHATI-781001

E-Tender Notice No. APGCL/CGM(H&C)/2026-27/LTPS/Riverside Boundary wall/08 dated:24/09/2026

Name of the work: Construction of riverside Boundary Wall at Lakwa Thermal Power Station, Maibella, Assam.

September-2026

Price: - ₹ 2500.00
(Non-Refundable)

INDEX

Chapter			Page No
Chapter-I	Tender Notice	….	2 - 3
Chapter-II	Terminology	….	4
Chapter-III	Instruction for bidders and special Conditions	….	5 - 15
Chapter-IV	Safety Engineering and Safety Code	….	16
Chapter-V	Contractor's Camp	….	17
Chapter-VI	Declaration	….	18
Chapter-VII	Declaration of litigation	….	19
Chapter-VIII	Schedule of work	….	20 - 22
Chapter-IX	Material Specification/requirement	….	23
Chapter-X	Bidder's Credentials	….	24
Chapter-XI	Drawing	….	25- 28
Chapter-XII	Photographs of the site	….	29
Annexures	Bid Security Format (Annexure-I) PBG Format (Annexure-II), Input Tax Credit Format (Annexure-III) & Guidelines for ITC Ratios	….	30-44

CHAPTER-I

ASSAM POWER GENERATION CORPORATION LIMITED

Registered Office: Bijulee Bhawan, Paltanbazar, Guwahati-781 001, Assam
CIN:U40101AS2003SGC007239
Tel. Fax No.0361-2739522
e-mail : saurav.saikia@apgcl.org, Website : www.apgcl.org

E-Tender Notice No. APGCL/CGM(H&C)/2026-27/LTPS/Riverside Boundary wall/08 dated: 24/09/2026

Invitee	The Chief General Manager (Hydro & Civil) 3rd Floor Bijulee Bhawan, Paltanbazar, Guwahati, Assam, PIN-781001.
Name of work	**Construction of riverside Boundary Wall at Lakwa Thermal Power Station, Maibella, Assam.**
Duration of work	**180 days (One Hundred Eighty days)** from the date of issue of Work Order/PO.
Tendered value	Rs. 1,24,33,520.00 (Rupees One Crore Twenty-Four Lakhs Thirty-Three Thousand Five Hundred Twenty Only) **inclusive of all taxes.**
Eligibility of the bidder	Experienced and financially sound Civil Engineering firms / contractors with **Average Annual turnover for the three Financial Years i.e. for the three Financial Years i.e. FY 2022-23. FY 2023-24 and FY 2024-25 should not be less Rs. 49,73,408.00 (40% of the tendered amount)** and having experience of successfully completing **similar works during the last 7 years** ending last day of month previous to the one in which applications are invited should be either of the following:- a. **Three similar co**mpleted works each costing not less than the amount equal to **Rs. 49,73,408.00 (40% of the tendered amount). Or** b. Two similar completed works each costing not less than the amount equal to **Rs. 62,16,760.00 (50% of the tendered amount). Or** c. One similar completed work costing not less than the amount equal to **Rs. 99,46,816.00 (80% of the tendered amount).** (Supporting documents to be submitted).
Tender fee (Non-refundable)	**Rs. 2500/- (Rupees Two Thousand Five hundred only)** **Tender processing fees must be deposited online as per instructions given vide as per OM. No. FEB. 269/2017/27 dated 21.08.2019. No exemption will be allowed in submission of tender fees for any bidder.**
Earnest Money Deposit (EMD)	**Rs. 2,48,670.00 (for General)** **Rs. 1,24,335.00 (for SC/ST/OBC) For Individual only** **EMD amount should be deposited online as per Finance Department Govt. of Assam office memorandum (OM).No. FEB.269/2017/27 dated 21.08.2019. EMD through Bank Guarantee (BG) will also be accepted. No exemption will be allowed in submission of EMD for any bidder.**
Start date of Tender	**11.00 a.m. on 25/09/2026**
Last date and time of online bid submission	**11.00 a.m. on 12/10/2026**
Tender Opening	Technical bid opening **03.00 p.m. on 12/10/2026**

Bidder must download the Bidding Documents and submit the bid electronically on the portal https://assamtenders.gov.in

The Bidders will be required to submit the bids by using own Digital Signature Certificate with both Signing and Encryption Certificates (minimum Class-II Certificate). Prospective Bidders must procure DSC before participating in the tenders. The viewing & downloading of the bid document will be free of cost.

Bid shall be submitted electronically/ online.
The bidder must submit the requisite tender fee and EMD through online as per Finance Department Govt of Assam office memorandum (OM) No. FEB. 269/2017/27 dated: 21.08.2019.

The Bidders will be required to download the Bidding Documents from the web portals mentioned above. However, they will have to pay a non - refundable tender document fee as mentioned above online, the details of which are stipulated in the tender document. The acceptance of the bid shall be subjected to acceptance of both document fee and Bid security or EMD.

The Chief General Manager (Hydro & Civil), APGCL is not bound to accept the lowest rates and reserves the right to accept or reject any or all tenders without assigning any reason thereof.

Note: Any addendum/corrigendum/extension etc. in respect of this tender shall be issued on the portal https://assamtenders.gov.in and APGCL's website: www.apgcl.org.

Yours faithfully,

24/09/2026

Chief General Manager (Hydro & Civil)
APGCL

Memo no: APGCL/CGM (H&C)/W/2026-27/1109/02 Date: 24/09/2026

C.c. to: -

1) The OSD to The Hon'ble Chairman, APGCL, Bijulee Bhawan, Paltanbazar, Guwahati-781 001, for favour of kind information to The Hon'ble Chairman, APGCL.
2) The OSD to The Managing Director, APGCL, Bijulee Bhawan, Paltanbazar, Guwahati-781 001, for favour of kind information to The Managing Director, APGCL.
3) The Chief General Manager (Gen), APGCL, Bijulee Bhawan, Paltanbazar, Guwahati-781 001, for information.
4) The Chief General Manager (F&A), APGCL, Bijulee Bhawan, Paltanbazar, Guwahati-781 001, for information.
5) The General Manager, LTPS, APGCL, Namrup for information and necessary action and wide circulation.
6) The Assistant General Manager (C), LTPS, APGCL, Namrup for information and necessary action and wide circulation
7) Relevant File.

CHAPTER-II

1 TERMINOLOGY

1.01 APGCL wherever used in this document shall mean Assam Power Generation Corporation Limited incorporated vide The Companies Act 1956 in exercise of Powers conferred under the Act including subsequent amendments, if any. APGCL is a successor company of ASEB.

1.02 CGM (Hydro & Civil)) or owner or purchaser or project authority wherever used in this document shall mean the officer holding the post of the Chief General Manager (Hydro & Civil) APGCL, Guwahati (Assam), who or his authorized representative will exercise authority on behalf of the Department in respect of the Tender and the works specified herein.

1.03 Engineer-in-Charge/or engineer shall mean the Officer holding the charge of the Departmental post of General Manager/Assistant General Manager (Civil) pertaining to supervision of works specified in this document.

1.04 The term 'Contractor' wherever used in this document shall mean the individual/firm or company who shall have entered into a contract agreement with the owner or the project authority, undertaking on his behalf to carry out the works in full or in part as may be specified in contract documents, and shall include in the case of an individual/ his heirs, administrators and permitted assignees, in case of a firm, the partners of the said firm, their respective heirs, executors, administrators and permitted assignees, and in case of a Company its successors and permitted assignees.

1.05 Contract documents shall mean and comprise the following documents and shall be the basis of agreement between the owner and the contractor for carrying out the works in accordance with the terms and conditions, specifications, drawings and directions contained in the said documents.

a) Bid documents duly filled in respect of rates, process & signed, the tender forms properly filled in, signed and dated by the contractor & duly submitted.

b) Contractor's original bid proposal and subsequent correspondences relating to clarifications and negotiations, if any, prior to award of the contract.

c) Equipment, specifications and drawings, so far as applicable

d) Approved agreement forms duly signed, dated and sealed by the contractor and the owner as specified in the said forms

1.06 'Equipment' and 'Plants' shall mean and include all sorts of machineries and accessories, apparatus, instruments, components manufactured articles and parts etc. to be supplied or provided by the contractor under the terms of the contract, unless otherwise specified

1.07 The 'Works' shall unless be repugnant to such description shall be construed and taken to mean the works contracted, or by virtue of the contract agreement, to be executed whether temporary or permanent and whether original, altered, substituted or additional.

1.08 The expression 'Specifications' wherever used in this document shall mean all the pertinent terms and stipulations furnished herein in respect of the work or part thereof and/or indicated in the drawings appended hereto and to be issued for construction and shall have reference also to other relevant terms and stipulations not furnished herein, but as far as applicable.

CHAPTER-III

INSTRUCTION FOR BIDDERS AND SPECIAL CONDITIONS

E- Tender Notice No. APGCL/CGM(H&C)/2026-27/LTPS/Riverside Boundary wall/08 dated: 24/09/2026.

BID INVITATION FOR: Construction of riverside Boundary Wall at Lakwa Thermal Power Station, Maibella, Assam.

Tendered Value: Rs. 1,24,33,520.00 (Rupees One Crore Twenty-Four Lakhs Thirty-Three Thousand Five Hundred Twenty Only) inclusive of all taxes.

EARNEST MONEY DEPOSIT: Rs. 2,48,670.00 (for General)
Rs. 1,24,335.00 (for SC/ST/OBC) For Individual only

EMD amount should be deposited online as per Finance Department Govt. of Assam office memorandum (OM). No. FEB.269/2017/27 dated 21.08.2019. EMD through Bank Guarantee (BG) will also be accepted. No exemption will be allowed in EMD to any other bidder possessing any other certificate other than that specifically mentioned herein.

1. DUE DATE AND CLOSING TIME

The bid will be received up to 11.00 A.M. of 12/10/2026. The opening time of the bids will be at 3.00 p.m. on the same day, and the venue will be the office of the Chief General Manager (H&C), APGCL, 3rd Floor, Bijulee Bhawan, Paltan Bazar, Guwahati-781001.

2. TIME OF COMPLETION OF WORK

The stipulated time of completion of the work is 180 days (One Hundred Eighty days) from the date of issue of Work Order/PO.

No time extension shall be granted to the contractor irrespective of size and volume of the awarded work.

3. BID-GUARANTEE OR EARNEST MONEY DEPOSIT: (E.M.)

i) Every bid or tender shall be accompanied by a deposit of Earnest Money (E.M.) for an amount indicated or as specified in the Tender Notice. EMD amount should be deposited online as per Finance Department Govt. of Assam office memorandum (OM)No. FEB.269/2017/27 dated 21.08.2019. EMD through Bank Guarantee (BG) will also be accepted. If EMD is submitted through BG, bidder will be required to upload the scan copy of the BG during online Bid submission and the original Hard Copy of the BG should reach APGCL HQ on or before bid opening.

Address to which the Original BG is to be submitted on or before Bid Opening:
The Chief General Manager (H &C)),
Assam Power Generation Corporation Ltd., 3rd Floor, Bijulee Bhawan, Paltan Bazar, Guwahati-1.

The BG shall be duly pledged in favour of the **Chief General Manager (F&A), APGCL** and shall remain in force for **06 (Six) Months** period from the Start Date of online Bid submission.

No interest shall be payable on such deposits.

Note: The bidder is requested to advice the Bank Guarantee issuing bank to comply with the following and ensure to submit, the receipt of the copy of SFMS message as sent by the issuing bank branch, along with the original bank Guarantee in APGCL's tender issuing office:
The Bank Guarantee issued by the Bank must be routed through SFMS platform as per following details:

i. MT/IFN760/MT/IFN760 COV for issuing of Bank Guarantee.

ii. MT/IFFN 760/MT/IFN 767 COV for amendment of Bank Guarantee.

The above message/intimation shall be sent through SFMS by the BG issuing bank branch to Axis Bank, Paltan bazar Branch, A/C no. 375010200001380, IFS code - UTIB0000375, Branch Address - AXIS Bank Ltd, Commercial Building, A.T. Road, Guwahati - 781001, India.

i) The Earnest Money as mentioned above will be returned to the respective bidders as per Finance Department Govt. of Assam office memorandum (OM). No. FEB.269/2017/27 dated 21.08.2019 vide online.

ii) EMD of all the bidders will be refunded after uploading of Award of Contract (AOC) in the e - Procurement portal https://assamtenders.gov.in. (Within 10 working days).

iii) EMD of all non - responsive bidders in Technical/Financial stage, the EMD will be refunded after completion of the Technical/Financial Evaluation process in the e - Procurement portal https://assamtenders.gov.in (Within 10 working days).

iv) In case of cancellation of tenders (Before Opening) both tender processing fee and EMD will be refunded. (Within 10 working days)

v) In case Earnest Money is deposited through BG, then Original Hardcopy of the BG shall be returned back to the bidders through Indian Post/Courier, or the bidder can collect it from the O/o the CGM (H&C), APGCL, 3rd Floor, Bijulee Bhawan, Paltan Bazar. A format of submission of Earnest Money in the form of BG is attached along with the bid document.

vi) The department will not entertain any claim for release of the E.M. during the pendency of selection of contractors for awarding the contract. The department will not pay any interest on the E.M. deposit.

vii) The E.M. is liable to be forfeited in the absolute discretion of the CGM (H&C), APGCL if the selected bidder revokes or alter or causes to withdraw his offer/tender before the expiry of its validity or fails after the contract is awarded to him to execute the 'Contract Agreement' with the department or to commence the work within the period envisaged in the terms and conditions or as might be notified in the work order.

viii) A tender is liable to outright rejection in absence of the requisite E.M. deposit.

4. SECURITY DEPOSIT (S.D.) IN THE FORM OF PERFORMANCE BANK GUARANTEE

4.1 Performance Bank Guarantee amounting to **10 % of the Order Value by the successful bidders** must be deposited immediately before issuance of Letter of Award/Work Order. The successful bidder will be issued letter of intent before allotment of Work Order and he/she must immediately initiate the process for issuance of Bank Guarantee with the concerned **Nationalized Bank** or **Scheduled Bank of RBI** so as to ensure submission of PBG on the date of issuance of LoA /Work Order. The bidder may submit the requisite Security Deposit in the form of **Bank Guarantee** in favour of "**The Chief General Manager (F&A), APGCL, Bijulee Bhawan, Guwahati - 01**". Bid Security in any other form will not be accepted. The BG submitted for Security Deposit should have a **minimum validity of 21 (Twenty one months) i.e. 1 (One) year 9 (Nine) Months** from the date of handing over of site **but claim period of the BG should be extended up to 6 (six) months from the date of expiry of the said BG.** However, on successful completion of work, the PBG will be released 12 months after completion of work.

A Standard PBG format has been attached along with the bid document.

The bidders are requested to advise the Bank Guarantee issuing bank to comply with the following and ensure to submit, the receipt of the copy of SFMS messages as sent by the issuing bank branch, along with the original BG in APGCLs tender issuing office:

The bank guarantee issued by the **Nationalized Bank** or **Scheduled Bank of RBI** must be routed through SFMS platform as per following details:

i. MT/IFN 760/MT/IFN 760 COV for issuance of Bank Guarantee.

ii.MT/IFN 760/MT/IFN 767 COV for amendment of Bank Guarantee.

The above message/intimation shall be sent through SFMS by the BG issuing Bank Branch to **AXIS Bank,**

Paltanbazar Branch, Account No: 375010200007573, IFS Code-UTIB0000375, Branch Address-

AXIS Bank Ltd., Commercial Building, A.T. Road, Guwahati-01.

Apart from Bank Guarantee, Performance Security Deposit can also be submitted through Fixed Deposit (FD) and Demand Draft (DD), pledged / drawn in favour of The Chief General Manager (F&A), APGCL. All other Terms & Conditions regarding the Performance Security Deposit shall remain the same as mentioned in the above paragraphs.

4.2 Such S.D. shall be forfeited or appropriated by invocation of PBG by the CGM (H&C), APGCL, Bijulee Bhawan, Guwahati under authority of the owner in his discretion towards any loss, damage etc. that may be sustained by the APGCL as a result of breach of any terms, conditions of the contract by the contractor, notwithstanding other remedies open to the APGCL under the terms of the contract or law.

4.3 In the event of contractor's Security Deposit being appropriated towards loss, damage etc, the contractor shall forthwith recoup the amount to restore the Security Deposit to the full current value within 30 (thirty) days from the date of intimation.

4.4 Subject to the provisions mentioned above and the provisions of **guarantee period of one year**, the Security Deposit will be returned to the contractor on the due and satisfactory completion of the contract and after all claims of the APGCL shall have been settled. The APGCL will not pay any interest on the amount of Security Deposit of Performance Guarantee. If the work gets damaged during the defect liability period due to default of the contractor or even otherwise (including due to force majeure) the CGM (H&C) reserves the right to forfeit the SD Money. **These points shall also be valid if SD is submitted through FD, DD.**

4.5 No exemption in SD money shall be granted to MSE bidders

5. GST / INCOME TAX CERTIFICATE (PAN / GST):

5.1 The offered rates and / or prices for the work shall include all taxes, duties, forest royalties, monopolies etc. as may be applicable on material and labour during the tenure of the contract. There will be no reimbursement for any increase or levy of new taxes, duties etc. on materials utilized for this work or equipment furnished / supplied for completing the work or for machineries, equipment, tools and tackle, fuel and lubricants etc. used in connection with the performance of the work, unless otherwise specified or qualified by the bidder in his bid. If, however, any tax or duty is levied by the Govt. or statutory body on the finished work (after complete installation and / or delivery), such tax or duty will be to the account of the APGCL.

5.2 The contractors must have an **Active GST Registration No. and should submit copy of GST Certificate and attested copy of PAN Card.**

5.3 Caste certificate must be produced where necessary.

5.4 Copy of acknowledgment of ITR filled for preceding three financial years and an undertaking regarding ITR filling for preceding three financial years immediately before the FY in which tax is required to be deducted (i.e. for AY 2023-24, AY 2024-25 & AY 2025-26).

6. BIDDER'S QUALIFICATIONS:

6.1 The Bidder should submit a list and description of similar or comparable works previously executed by him successfully during last 7 (seven) consecutive years indicating the individual volume and contract price along with the name and address of the respective owner / authority.

6.2 All prospective bidders are hereby notified that, before any bid submitted in response to this invitation is considered for award, the CGM (H&C), APGCL may require the bidder to submit a further statement of facts in detail as to the previous experience of the bidder and financial resource available with him for performing the contemplated work. The CGM (H&C), APGCL expressly reserves the right to reject any bid or which the facts as to business, financial and other resources or business experience, compared with the work bid upon, justify such rejection.

6.3 The Bidder should submit valid **Labour License Certificate**. The Bidder must possess Valid **Contractor License** issued by any department under Govt. of India or Govt. of any State or Union Territory of India.

6.4 Cost overrun shall not be accepted.

6.5 Civil Engineering firms/contractors with adequate experience of having successfully completed **similar works during the last 7 years** ending last day of month previous to the one in which applications are invited should be either of the following : -
a. Three similar completed works each costing not less than the amount equal to **Rs. 49,73,408.00 (40% of the tendered amount). Or**
b. Two similar completed works each costing not less than the amount equal to **Rs. 62,16,760.00 (50% of the tendered amount). Or**
c. One similar completed work costing not less than the amount equal **Rs. 99,46,816.00 (80% of the tendered amount).**

(Supporting documents to be submitted).

Similar works shall pertain to works involving Construction of RCC/Brick boundary wall. Works including walls other than brick work/ RCC walls shall not be considered for evaluation. Completion Certificates along with the respective Work Order must be submitted for all the executed works.

6.6 Contractors should be financially sound to invest the amount and should submit necessary evidence on this account. **CA certified Average Annual turnover for the three Financial Years i.e. FY 2022-23, FY 2023-24, FY 2024-25 should not be less Rs. 49,73,408.00 (40% of the tendered amount).** However, annual turnover certificate of each of the three financial years mentioned above must be supported by Audited Financial Statements. The CA certified average annual turnover may be accompanied with relevant financial documents for the **FY 2022-23, FY 2023-24, FY 2024-25.**

6.7 It should be ensured that the contractors shall have **Provident Fund Code No**. It will be ascertained that all the workers engaged by the contractor directly should be registered for Employees' Provident (EPF) and due contribution have been credited into their account. The **Bidder should also submit valid ESIC Certificates.**

6.8 The bidder should have adequate **manpower and machinery**. The proper manpower and machinery list at the disposal of the contractor which is to be deployed at site should be **submitted in form of notarized affidavit.**

6.9 The Bidder should not have been blacklisted by any State Government, Central Government, State PSU, Central PSU, Private Company, etc. Document where the bidder has 'solemnly' stated that he has not been blacklisted by any State Government, Central Government, State PSU, Central PSU, any Private Organization, etc. Such document shall be Notarized.

6.10 Certified copy from Chartered Accountant for Net Worth of bidder for FY 2024-25 must be submitted.

6.11 Bank solvency certificate not earlier than past 01 year from the date of floating of the tender. The date of issuance and amount should be clearly mentioned.

6.12 In the absence of the above stated requisite documents, the bid of bidder will be considered non-responsive. Therefore, the bidders are requested to read all the clauses of the bid carefully and bid accordingly.

7. BIDDER SHOULD EXAMINE & UNDERSTAND

All prospective bidders are required to thoroughly study and carefully examine all the terms and conditions, instructions, drawing & specifications pertaining to the work and visit the field of work to fully satisfy and acquaint themselves about the nature and location of work, the configuration of the ground. The spring level, the surface conditions, quality and quantity of materials required and their availability the type of equipment and facilities needed preliminary to and during the execution of the work and local conditions which may affect the work or cost thereof. Failure to do so will be at the bidder's risk.

8. SUBMISSION OF TENDER

8.1 Bidders are to quote their rates against each item in clear money (Rupees) value per unit of work (inclusive of all taxes) in the prescribed format.

8.2 The **rates are to be quoted on item rate basis. The rates are to be quoted in figures.**

8.3 The **rates quoted by the bidders will be inclusive of all taxes, royalties and other statutory levies as applicable**.

8.4 Bidders **should note that unusually low rates not feasible for execution may not be technically accepted.**

8.5 Bidders should note that during the time of execution of work, any item not covered by the schedule of work if required to be done as per decision of the CGM (H&C) / Engineer-in Charge of APGCL,
they have to execute such work/works as supplementary item of works, rates of which will be calculated by using the following formulae:
R= (T'/T) * P
Where, R= Rate of supplementary item of work
T'= Bid value
T= Tendered value
P= Accepted Rate for the work as per respective S.O.R. or estimate
If the rate of such supplementary item/items is/are not available in the aforesaid S.O.R, the same will be analysed by the department as per reasonable market price but in any case, of dispute for rate of supplementary item/items, the decision of CGM (H&C) will be final and conclusive.

8.6 The quoted rates will be firm for entire period of completion of the work. No price escalation on any component will be admissible.

8.7 Firms submitting tender should enclose a certified copy of the Firm's constitution and a certified copy of Power of Attorney authorizing a person to operate the tender and contract and should furnish full address of the partners and the persons holding power of attorney on behalf of the firm.

8.8 Information **regarding litigation, current or during the last five years, in which the Bidder is involved with APGCL/AEGCL/APDCL and with any other state or central PSU/department, must be furnished, if any in the prescribed format (at Chapter VII).**

8.9 The Corporation cannot be held responsible for non-receipt and postal delay.

8.10 Every page of the tender document to be duly sealed and signed by the bidder.

8.11 The contesting bidders must password protect the technical documents before uploading on the NIC portal. The password must be kept confidential and shared only with the concerned officials of APGCL. Also, the bidders shall submit a hard copy of the technical bids in the **O/o the CGM (Hydro & Civil), APGCL.** The password must be emailed to APGCL on the day of Technical Bid opening. The email Id to which the password is to be mailed is: saurav.saikia@apgcl.org

8.12 For any query regarding the tender, bidder shall email at:
aswini.choudhury@apgcl.org
Hirokjyoti.ghose@apgcl.org

9. AWARD OF CONTRACT

9.1 The contract will be awarded to that responsible bidder whose bid, confirming to the scheduled conditions of contract and specifications, will be most advantageous to the Department, price and other factors considered. An award mailed (or otherwise furnished) to the successful bidder will result in a binding contract without further action by either party. The CGM (H&C), APGCL does not bind itself to accept the lowest bid or any bid. As the interest of the Department may require, the right is reserved to reject any or all bids and to waive any minor informality or irregularity in bids received without assigning any reason thereof. Bid which are incomplete or which contain undesirable conditions are liable to rejection.

9.2 **APGCL will try to make timely payment of bills, but on unavoidable circumstances cannot guarantee timely payment of bills, for which no interest on the payable amount will be entertained.**

10. CONTRACT AGREEMENT

10.1 The 'Contract agreement' (or Tender Agreement) for the works will be drawn up with the selected bidder/bidders within 7 (Seven) days of issue of an intimation letter or e-mail and the contract documents will comprise as described herein before.

10.2 In a case where the selected bidder fails to commence the work as shall be notified in the work order/PO or fails to execute the tender agreement with the CGM (H&C), APGCL as stipulated herein before; the CGM (H&C), APGCL reserves the right to claim loss, damage etc. and take appropriate action under the terms of this document or law including forfeiture of S.D

11. TOOLS & PLANTS

11.1 The APGCL shall not furnish any tools & tackle, plants and equipment or such facilities for carrying out the work by the contractor (excluding hypothecation). The contractor shall arrange and maintain the equipment required for implementation of work all throughout the period of the contract.

12. MATERIALS & LABOUR

12.1 All materials (this includes without limitation raw materials, parts, components etc.) and labour required for carrying out the work shall be arranged and furnished by the contractor all throughout the tenure of the contract and strictly conform to relevant IS Code (latest revision).

12.2 The intending tenderers should inspect the prospective sources of collection of raw materials and fully satisfy him about the quality of materials, availability of materials, lead, and mode of transportation. The Department shall not consider, after acceptance of the contract, to pay any extra charge for lead or any other reasons, in case the contractor found later on, to have misjudged, the quality/quantity of availability of such materials from the source of collection.

12.3 APGCL shall not issue any construction materials such as cement, reinforcement bar, or any other materials.

12.4 In connection with the performance of work throughout the tenure of the contract, the engagement of Labour and payment therefore by the contractor shall conform to the statute, the pertinent law or act of the Central & State Govts, as well as rules, regulations and orders of the local authorities or statutory bodies, as may be in force from time to time.

12.5 The materials procured for the work by the contractor shall be placed at site properly for inspection of Engineer-in charge before utilization. Any defecting materials should be replaced immediately for which no extra charge will be payable to the contractor.

13. CHANGES IN QUANTITY AND ITEM

13.1 The CGM (H&C), APGCL may at any time, by a written order make changes within the general scope of the contract, in any one or more of the following:
Quantity of any item
Alteration or omission of any item
Addition of any item
Alteration in drawings, designs or specifications
If any such change causes an increase or decrease in the cost of or the time required for performance of the contract, an equitable adjustment shall be made in the contract price or time schedule or both and the contract shall be modified in writing accordingly. Any claim by the contractor for adjustment under this clause must be asserted within 30 days from the date of receipt by the contractor of the notification of change: PROVIDED HOWEVER, that the CGM (H&C) if decides that the facts justify such action, may receive and act upon any such claim asserted at any time prior to final payment under the contract. Failure to agree to any adjustment shall be a dispute concerning a question of fact within the meaning of the disputes mentioned herein after. However, nothing in this clause shall excuse the contractor from proceeding with the contract as changed.

14. INSPECTION

14.1 All works and all supplies (this term includes without limitation raw materials, parts, components,

intermediate assemblies and end products) under the contract shall be subject to inspection and test by the CGM (H&C), APGCL or his authorized person to the extent practicable at all times and places including the period of construction or manufacture and in any event prior to final acceptance. For any test recommended by the Department to be conducted at site or Govt Authorized Laboratory, the cost of the tests has to be borne by the contractor.

14.2 In case any work or part thereof or/and any supply is found defective in material or workmanship or otherwise not in conformity with the specifications or drawings or requirements of the contract, the CGM (H&C), APGCL shall have the right either to reject them or to require their correction, as directed by the department.

14.3 The inspection and test by the CGM (H&C), APGCL or his authorized person of any work or any supplies does not relieve the contractor from any responsibility regarding defects or other failures to meet the contract requirements which may be discovered prior to final acceptance. Except as otherwise provided in this contract final acceptance shall be conclusive except as regards latent defects, fraud or such gross mistakes as amount to fraud.

14.4 The contractor shall provide and maintain an inspection system acceptable to the CGM (H&C), APGCL covering the works and/or supplies hereunder. Records of all inspection works by the contractor shall be kept complete and available to the CGM (H&C), APGCL during the performance of this contract.

15. FORCE MAJEURE

15.1 Force Majeure shall cover only act of God, Fire, War, Strikes, Riots and Civil Commotion, Act of Government etc. Any constraints other than those specified above will not constitute force majeure condition. In view of the other constraint beyond the control of the Contractor primarily due to statutory compulsion, extension of execution may also be considered on individual merit of the case. In case of Force Majeure condition, the contractor shall notify such condition to CGM (H&C) within 15 (fifteen) days from the beginning of such delay in writing for consideration and acceptance.

15.2 It may be noted that in the event of Geological surprises/problems, the work may need to be stopped for some time at the discretion of the engineer in charge. The stoppage period shall be excluded from the time period allotted for completion of the work. The time of completion shall be accordingly adjusted for such stoppage of work, if any.

16. LIQUIDITY DAMAGE

16.1 In case of delay in work completion beyond the work completion period, the contractor shall be liable to the following:

a) The liquidated damages shall be payable for delay in completion of the work @ 1 % (one percent) of the executed value per week or part thereof of delay. The liquidated damages so payable shall not exceed 10% (ten percent) of the executed value. However, the payment of liquidated damages shall not in any way relieve the Contractor from any of its obligations to complete the works or from any other obligations and liabilities of the Contractor under the Contract.

b) Complete the balance work giving notice to the Contractor and to recover any extra expenditure incurred thereby for having to purchase these materials or complete the work at a higher price, at risk and responsibility of the Contractor.

c) Cancel the Contract/Work Order wholly or in part and to purchase materials/equipment and execute the work at the full risk and cost of the Contractor and forfeit the security deposit.

d) The work is liable to be stand cancelled without any compensation, if the work is not completed within 180 days from the end date of the contractual completion date as per work order.

17. TERMS OF PAYMENT

1) 1st Running Account Bill shall be entertained only after completion of minimum 40% of total work.
2) 2nd Running Account Bill shall be entertained only after completion of minimum 70% of total work.
3) 3rd & Final Account Bill shall be entertained only after completion of 100 % of total work.

4) Bills shall be entertained on the basis of actual measurement of completed work as per standard procedure.
5) Every payment shall be made subject to the availability of fund.

18. CONTRACTUAL FAILURE:

In the event of contractual failure of any respect on the part of the Contractor, APGCL shall be entitled to forfeit the security deposit or any deposit or any payment due to the Contractor from this or his other contracts towards the recovery of APGCL's claim for damages arising out of the failure. In addition, APGCL may black-list or ban the Contractor or pending enquiry, suspend him or take any other steps considered suitable.

19. SETTLEMENT OF DISPUTES:

19.1. Amicable Settlement

If any dispute or difference (s) of any kind whatsoever arise between the parties in connection with or arising out of the work/contract, including without prejudice to the generality of the foregoing, any question regarding its existence, validity or termination, or the execution of the Contract whether during the progress of the Contract or after its completion and whether before or after the termination, abandonment or breach of the Contract, the parties shall seek to resolve any such disputes or differences by mutual consultation between the authorized representatives of both the parties for amicable settlement of the dispute within a period of ninety (90) days after receipt by one party of the other party's request for such amicable settlement.

19.2. Arbitration

Any dispute, controversy or claim arising out of or relating to this work/contract or the breach, termination or invalidity thereof, that cannot be settled amicably between both the parties shall be settled by Arbitration. In any arbitration proceeding hereunder-

1. Arbitration shall be in accordance with the Arbitration & Conciliation Act, 1996 or any statutory amendment thereof.
2. Arbitration shall be by a sole arbitrator, if agreed upon by the Parties. Failing agreement on the identity of such sole arbitrator, each Party shall appoint one arbitrator, and these two appointed arbitrators shall jointly appoint a third arbitrator, who shall chair the arbitration panel and act as the Presiding Arbitrator.
3. In an arbitration proceeding consisting of three arbitrators, if a party fails to appoint an arbitrator within 30 days from the receipt of a request to do so from the other party; or the two appointed arbitrators fail to agree on the third arbitrator within thirty days from the date of their appointment, the appointment shall be made upon request of a party by the High Court or by the President, Institution of Engineers (India), Assam State Centre.
4. In an arbitration with sole arbitrator, if the parties fail to agree on the arbitrator within 30 days from receipt of a request by one party from the other party to so agree, the appointment shall be made, upon request of a party, by the High Court or by the President, Institution of Engineers (India), Assam State Centre.
5. The arbitration proceedings shall, unless otherwise agreed by the Parties, be held in Guwahati.
6. English language shall be the official language for all purposes.
7. The cost of arbitration shall be equally shared among both the parties.
8. Decision of the sole arbitrator or of a majority of the arbitrators (or of the third arbitrator if there is no such majority) and the Arbitral Award shall be final and binding on the parties and the persons claiming under them respectively and shall be enforceable in any court of competent jurisdiction, and the Parties hereby waive any objections to or claims of immunity in respect of such enforcement.
9. The arbitrators and the parties to the arbitration shall maintain confidentiality of all arbitral proceedings except award where its disclosure is necessary for the purpose of implementation, enforcement and setting aside of the award.

20. LEGAL JURISDICTION

Any disputes or differences arising under, out of, or in connection with this work/contract, shall be subject to the exclusive jurisdiction of courts at Guwahati only.

21. TERMINATION:

21.1 APGCL may, by not less than 7 (seven) days written notice may terminate the contract, if the contractor:

i. Fails to remedy a failure in the performance of his obligations,
ii. Becomes insolvent or bankrupt,
iii. Submit to APGCL statement which has a material effect on the rights, obligations or interest of APGCL and which the contractor known to be false,
iv. As result of force majeure, if the whole work cannot be performed for a continuous period of 90 (ninety) days. APGCL shall make payment upon termination to contractor the services performed by the contractor to the entire satisfaction of APGCL prior to date of termination.

21.2 If the work remains unfinished even beyond 180 days of Contractual completion date for the work without any valid reason/ justification, in that case the Work Order for the work will automatically be cancelled along with termination of the work and putting the **Contractor on Holiday List for a period of 5 (five) years.**

22. REJECTION:

In the event, any of the materials supplied by the Contractor or work executed is found defective or otherwise not in conformity with the requirements of the contract/tender specifications, APGCL shall either reject the material/work or request the Contractor in writing to rectify the same. The Contractor, on receipt of such notification shall rectify or replace the defective material/rectify the defective work free of cost to APGCL. If the Contractor fails to do so, APGCL may at its option: -

(a) Replace or rectify such defective/non-conforming material/correct the defective work and recover the extra cost so involved plus 15% as overhead charge from the Contractor, or

(b) Terminate the contract for default.

23. DEATH, BANKRUPTCY ETC.

If the Contractor becomes bankrupt or being a corporation is in the process of winding up, amalgamation or reorganization, then APGCL shall be at liberty to: -

(A) Terminate the contract forthwith by notice in writing to the Contractor or to the liquidator or receiver or to any person in whom the contract may become vested.

(B) Give such liquidator, receiver or other person the option of carrying out the contract subject to his providing a guarantee for the due and faithful performance of the contract up to an amount to be determined by APGCL. In case of death of the Contractor before completion of work and supply, then APGCL shall be at liberty to:

(a) Close up the contract and take over the completed portion of work/supply done and made as per specification and make final payment to the legal heir of the Contractor on receipt of claim from such legal heir.

(b) Give the contract to the legal heir of the Contractor subject to his depositing a performance security for the due and faithful performance of the contract. The performance security amount shall be determined by APGCL commensurate with the incomplete portion of the work/supply. APGCL will enter into a fresh contract with the legal heir of the Contractor on the same terms and conditions of the earlier contract.

24. PRECAUTION TO BE TAKEN DURING EXECUTION OF WORK:

The Contractor shall take responsible for statutory precaution during execution of the work at work site so as to avoid accident and damage to equipment and injury to workman and to prevent theft, pilferage etc.

25. LIABILITY FOR ACCIDENT AND DAMAGE:

The Contractor shall not claim for compensation arising out of any accident(s) or damages done during the course of work execution at work site & the Contractor will be responsible for paying compensation to the worker as per Workmen Compensation Act, 1923 and subsequent amendments thereof. It is further clarified that in case any payment is to be made by the Contractor under the said Workmen Compensation Act, the same shall be paid forthwith and in case of failure in making such payments APGCL shall make payment and the amount so paid shall be deducted from the bills of the Contractor.

26. VALIDITY OF OFFER

The Offer shall be valid for a period of 180 days from the date of submission of the bid by the bidder. However, the bidder may be required to extend the validity of bid if sought by APGCL.

27. CO-OPERATION WITH OTHER CONTRACTORS

The Contractor shall agree to co-operate with the APGCL's other contractors for associated supplies and freely exchange with them such technical information as is necessary to obtain the most efficient and economical design and to avoid unnecessary duplication. No remuneration shall come from APGCL for such technical co-operation.

28. SUBLETTING CONTRACT:

The Contractor shall not, without the consent in writing of APGCL assign or sublet his contract, or any substantial part thereof, or interest therein of benefit or advantage whatsoever, other than for raw materials or for minor details or for any part of the work of which the Sub-contractors are named in the tender provided any such consent shall not relieve the Contractor from any obligation, duty or responsibility under the contract.

29. DEDUCTION FROM CONTRACT PRICE:

All cost, damages or expenses which APGCL may have made for which, under the contract, the Contractor is liable, may be deducted by APGCL from any money due or becoming due by APGCL to the Contractor or may be recovered by action at law or otherwise from the Contractor. In the event of recovery to the necessary extent becoming impossible owing to insufficiency of the earnest money/security deposit and withheld amounts, the balance due to APGCL may at the option of APGCL be recovered from any money due to the Contractor from APGCL under other contracts with the Contractor.

30. REGULATION OF LOCAL AUTHORITIES:

The Contractor shall abide by the regulation of local Authorities unless such regulation is repugnant to any terms of the contract agreed upon. The Contractor is required to fulfil all criteria related to Labour Laws. The Contractor will also comply with all regulations/ directives of both State & Central Government Pollution Boards.

Royalties on minor minerals shall be deducted as per the GoA Notification No.PEM.130/2021/40 dated 7th October, 2021.

31. SUSPENSION OF BUSINESS DEALINGS WITH FIRM/CONTRACTOR:

APGCL may suspend business dealings with a Firm/ Contractor, if: (a) The Central Bureau of Investigation or any other investing agency recommends such a course in respect of a case under investigation; and if a prima facie case is made out that the firm is guilty of an offence involving unethical, unlawful, fraudulent means in relation to business dealings, which, if established, would result in business dealings with it being banned. (b) APGCL has past record of non-performance of the Firm in it's previously awarded contracts. (c) APGCL has record of ban against the Firm by other Government / Public sector utility. (d) However, APGCL shall give the Firm/Contractor a fair chance to explain the circumstances of such previous suspensions.

32. BANNING OF BUSINESS DEALINGS WITH FIRMS/CONTRACTORS:

APGCL may ban business dealings with a Firm/Contractor, if:

a) The owner (s) of the Firm/Contractor is convicted by a court of law following prosecution for offenses involving unethical, unlawful, fraudulent means in relation to business dealings.

b) There is strong justification that the Firm has been guilty of malpractices, such as, bribery, corruption, fraud, substitution of tenders, interpolation, misrepresentation, evasion or habitual default in payment of any Government tax etc.

c) The Firm continuously refuses to return government dues without showing adequate cause and Government are reasonably satisfied that this is not due to reasonable dispute which would attract proceeding in arbitration or court of law.

d)The Firm is found guilty of involving in unethical practices, such as:

1."Corrupt practice" involving offering, giving, receiving or soliciting, directly or indirectly, of anything of value to influence the action of any such official procurement process or in contract execution.

2."Fraudulent practice" involving misrepresentation or omission of facts in order to influence a procurement process or the execution of a contract to the detriment of the Employer.

3."Collusive practice" involving a scheme among bidders (prior to or after submission) designed to establish bid prices at artificial non-competitive levels and to deprive the Employer of the benefits of free and open competition.

4."Coercive practice" involving harming or threatening to harm directly or indirectly, persons or their property

to influence procurement process or the execution of a contract. APGCL may sanction a Firm/ Contractor or its successor, including declaring ineligible, indefinitely or for a period of not less than 3 (three) years

33. BID EVALUATION CRITERIA:

a. **Techno-commercial Part:**

i. The Techno-commercial Part of bid shall be evaluated as per clauses stipulated in this tender document and as per instructions laid down in the document "General Condition for Supply and Erection of APGCL, 2014".

ii. Bidders must ensure that complete bid along with all details & documents as sought are submitted as per requirements of this tender document.

iii. If any of the clauses of the Tender contradict the clauses of the document- "General Condition for Supply & Erection, 2014" of APGCL, then those stated in this Tender shall prevail.

b. **Price Part.**

The quoted price inclusive of all components shall be considered during price bid evaluation. The bidder must clearly specify all tax & duties levied etc., in the absence of which the same shall be at bidder's scope.

34. SPECIAL CONDITIONS:

34.1 : The bidder or their authorised representative is advised to visit the site and acquaint themselves with the site conditions before participating in the tender.

34.2 : Bidder shall provide work schedule in details in the form of bar chart or PERT, CPM.

35. Input Tax Credit (ITC)

35.1 The maximum Input Tax Credit (ITC) utilization by Contractors for the work will be 70% (seventy percent). In this regard, the Contractor has to submit the Sealed & Signed Annexure – III, regarding Input Tax Credit (ITC).

Guidelines regarding determination of maximum permissible Input Tax Credit (ITC) utilization ratios in respect of works contracts executed under Works Departments and Public Sector Undertakings of the Government of Assam is attached with this tender for ready reference.

CHAPTER-IV

SAFETY ENGINEERING & SAFETY CODE

1. SAFETY ENGINEERING:

Accident prevention shall be an essential part of the programme of the contractor for all operations involved in performance of the contract under this invitation in order to reduce cost of construction measured in terms of:
Near Miss Accidents
Accidents
Temporary injury
Permanent injury
Fatal accident
b) Loss of materials resulting from accidents
c) Loss of damage to equipment.
d) The cost of work man's compensation insurance.
e) Loss of time due to accident, ultimately leading to downtime reduction.
Suitable safety programme should be developed to cope with the particular hazard for each operation. (Operation & maintenance).

GENERAL SAFETY PROGRAMME:

The following program when vigorously promoted by the works- management may be effective in reducing the accident rate
a) Secure full support from top management of concerned divisions or sections
b) Publicize safety programme
c) Develop a safety programme for each job.
d) Maintain adequate first aid facilities
e) Make safety practices effective.
f) All safety ropes, **PPE (Personal Protective Equipment**), harness, boots, gloves/insulated gloves for electrical works, helmets and First AID Box required for the work have to be supplied by the contractor at his own expense.

SAFETY CODE:

An effective measure of reducing the accident rate during various operations and maintenance works may consist in implementation of respective provisions of the following safety codes accompanied by vigorous promotion and publicity of safety programme.
a) IS: 818 (C.P. for safety health requirements in electric & gas welding & cutting operations).
b) IS: 3696(S.C for scaffolding & ladders)
c) IS: 7205 (S.C for erection of structural steel work)

SAFETY EQUIPMENT'S:

All necessary personnel safety equipment as considered adequate by the Engineer-in- Charge should be kept available for use of the persons employed on the site and maintain in a condition suitable for immediate use. The contractor should take adequate steps to ensure proper use of equipment by those concerned.
Those engaged in welding works shall be provided with welder's protective eye-shield. Suitable protective foot ware, protective head gears, suitable face masks etc. are to be provided to workers engaged for operation and maintenance works. The contractor shall not employ men below the age of 18 for any work.

2. INSPECTION

To ensure effective enforcement of the rules and regulations relating to safety precautions, the arrangements made by the contractor shall be open to inspection by the Engineer-in-Charge or his representative.

3. COMPENSATION

No extra charges or additional compensation will be admissible to the contractor by the department for any work done to comply with the provisions of safety Engineering and Safety Code.

CHAPTER-V

CONTRACTOR'S CAMP

1. CAMP SITES

The contractor shall provide, maintain and operate under competent direction such camp facilities convenient to the site works under this contract as are necessary for housing, feeding and accommodation of his employees. The location, construction, operation and maintenance of such camps shall be subject to the approval of the Assistant General Manager/ Engineer in charge of the site.

2. USE OF LAND FOR CONSTRUCTION PURPOSES

Such land as may be available at work- site will be allowed to be used by the contractor for construction of his camps free of charge. However, development of clearances of the land will have to be done by the contractor at his own cost. The contractor will be responsible to clear and clean the site after completion of his works and handover the land to the Engineer-in-Charge. The contractor will be liable to pay compensation for any damages done to the land or neighbouring area.

3. SANITATION IN CAMP SITE:

The temporary sanitation in the campsite should be properly maintained and hygienic so that pollution can be controlled and just before completion of the work site must be cleared properly.

4. ELECTRICITY SUPPLY:

Electricity supply will be on a chargeable basis.

CHAPTER-VI

DECLARATION

I / We hereby declare that I/we shall treat the tender documents and other records connected with the works as secret/confidential and shall not communicate information derived there from to any person other than person to whom I//We/am/are authorized to communicate the same or use the information to any manner prejudicial to the safety of the state.

Signature of the tenderer

Full Name

(In Block letters)

Address ……

Phone/ Mobile ……

Email: ……..

Date: ……

Bank name: …….. Bank

A/C no. & IFSC: ……

* This page must be filled by the bidder

CHAPTER-VII

DECLARATION OF LITIGATION

Information on litigation history in which bidder is involved.
(To be filled by the bidder)

Employer (APDCL/APGCL/AEGCL and with any other state or central PSU/department)	Cause of Dispute	Amount involved	Remarks showing present status

If No Litigation is on going. then it should be mentioned as "NIL"

CHAPTER-VIII

Schedule of work :

ANNEXURE-A

To,

The Chief General Manager (Hydro & Civil)
APGCL, Bijulee Bhawan,
Paltanbazar, Guwahati-1

Sub: Submission of tender for the work: **Construction of riverside Boundary Wall at Lakwa Thermal Power Station, Maibella, Assam.**

Ref: Your E-NIT: **APGCL/CGM(H&C)/2026-27/LTPS/Riverside Boundary wall/08 dated: 24/09/2026.**

Dear Sir,
In response to your above notice I/We …….. am /are submitting herewith my / our rates for the work as mentioned below. Necessary documents, as asked for, are enclosed herewith, for your kind perusal.

Sl. No.	Description of Item	Quantity	Unit	Rate (Rs.) Including all taxes	Amount (Rs) Including all taxes
1	Earth work in excavation by mechanical means (Hydraulic excavator)/manual means over areas (exceeding 30 cm in depth, 1.5 m in width as well as 10 sqm on plan) including getting out and disposal of excavated. All kinds of soil.	752.760	CuM		
2	Earth work in excavation by mechanical means (Hydraulic excavator)/ manual means in foundation trenches or drains (not exceeding 1.5 m in width or 10 sqm on plan), including dressing of sides and ramming of bottoms, for all lift, including getting out the excavated soil and disposal of surplus excavated soil as directed, within a lead of 50 m. All kinds of soil.	8.320	CuM		
3	Filling available excavated earth (excluding rock) in trenches, plinth, sides of foundations etc. in layers not exceeding 20cm in depth, consolidating each deposited layer by ramming and watering, lead up to 50 and for all lift.	582.9700	CuM		
4	Soling : Brick on edge flooring with bricks of class designation 7.5 on a bed of 12 mm cement mortar, including filling the joints with same mortar, with common burnt clay non modular bricks:	499.70	SqM		
5	Providing and laying in position cement concrete of specified grade excluding the cost of centering and shuttering - All work up to plinth level : 1:3:6 (1 Cement : 3 coarse sand (zone-III) derived from natural sources : 6 graded stone aggregate 40 mm nominal size derived from natural sources)	51.740	CuM		

6	Providing and laying in position cement concrete of specified grade excluding the cost of centering and shuttering - All work up to plinth level :1:2:4 (1 cement : 2 coarse sand (zone-III) derived from natural sources : 4 graded stone aggregate 20 mm nominal size derived from natural sources.	0.27	CuM		
7	Providing and laying in position specified grade of reinforced cement concrete, excluding the cost of centering, shuttering, finishing and reinforcement - All work up to plinth level : 1:1.5:3 (1 cement : 1.5 coarse sand (zone-III) derived from natural sources : 3 graded stone aggregate 20 mm nominal size derived from natural sources).	275.23	CuM		
8	Centering and shuttering including strutting, propping etc. and removal of form for - Foundations, footings, bases of columns, etc. for mass concrete.	2688.92	SqM		
9	Brick work with common burnt clay F.P.S. (non modular) bricks of class designation 7.5 in foundation and plinth in : Cement mortar 1:4 (1 cement : 4 coarse sand).	212.437	CuM		
10	CEMENT PLASTER (IN FINE SAND) 6 mm cement plaster of mix : 1:3 (1 cement : 3 fine sand) Both side of the boundary wall.	4418.75	SqM		
11	12 mm cement plaster of mix : 1:4 (1 cement: 4 fine sand) at column (above plinth) of marrshy portion.	5.12	SqM		
12	Finishing walls with water proofing cement paint of required shade : New work (Two or more coats applied @ 3.84 kg/10 sqm) Both side of the boundary wall.	4418.75	SqM		
13	Steel reinforcement for R.C.C. work including straightening, cutting, bending, placing in position and binding all complete upto plinth level. Thermo-Mechanically Treated bars of grade Fe-500D or more.	28678.86	kg		
14	Providing and fixing concertina coil fencing with punched tape concertina coil 600 mm dia 10 metre openable length (total length 90 m), having 50 nos rounds per 6 metre length, upto 3 m height of wall with existing angle iron 'Y' shaped placed 2.4m or 3.00 m apart and with 9 horizontal R.B.T. reinforced barbed wire, stud tied with G.I. staples and G.I. clips to retain horizontal, including necessary bolts or G.I. barbed wire tied to angle iron, all complete as per direction of Engineer-in-charge, with reinforced barbed tape(R.B.T.) / Spring core (2.5 mm thick) wire of high tensile strength of 165 kg/ sq. mm with tape (0.52 mm thick) and weight 43.478 gm/ metre	875.00	Metre		

15	Structural steel work riveted, bolted or welded in built up sections, trusses and framed work, including cutting, hoisting, fixing in position and applying a priming coat of approved steel primer all complete. ISA (60X60X6) mm Y ANGLE POST	1549.80	kg		
16	Providing and fixing G.I. chain link fabric fencing of required width in mesh size 50x50 mm including strengthening with 2 mm dia wire or nuts, bolts and washers as required complete as per the direction of Engineer-incharge. Made of G.I. wire of dia 4 mm	24.000	SqM		
17	Providing and fixing bolts including nuts and washers complete	2.9920	kg		
18	Structural steel work riveted, bolted or welded in built up sections, trusses and framed work, including cutting, hoisting, fixing in position and applying a priming coat of approved steel primer all complete	939.290	kg		
				Total:	

CHAPTER-IX

THE MATERIALS OF THE FOLLOWING MANUFACTURERS OR BRAND ARE TO BE USED IN THE WORKS

(BIDDERS MUST QUOTE THEIR RATES ACCORDINGLY)

1. Cement (PPC):	ACC, Lafarge, Dalmia Cement, Ultratech, Ambuja Cement, J.K. Cement, Star.
2. Reinforcement Steel (TMT-500/Fe 500D):	TATA, Esser Steel, JSW, SAIL, Jindal Steel, Shyam Steel, RINL.
3. Structural Steel:	TATA, BANSAL, SAIL, NEZONE, RINL.

The bidder selected for execution of the work will have to conform with the above-mentioned specifications of items or any other specification/brand etc. as directed by the Engineer in Charge.

Engineer in Charge of the work will be Assistant General Manager (Civil), LTPS

CHAPTER-X

BIDDER'S CREDENTIALS		
Particulars	**Validity period**	**Supporting documents**
1. Financial status (**Annual Turnover for the F.Y. 2022-23, 2023-24, 2024-25**). 2. Certified copy from Chartered Accountant for Net Worth of bidder for **FY 2024-25**. 3. PAN 4. Active GST Registration certificate 5. Registration certificate of firm (if any) 6. Labour License 7. E.P.F 8. List of similar works previously executed. 9. ITR return for **AY 2023-24, AY 2024-25 & AY 2025-26** 10. Manpower & machinery list in notarized form 11. ESIC 12. Valid Contractor license from Govt. of India or Govt. of Assam. 13. Bank solvency certificate. 14. Every page of the tender document to be duly signed manually and submitted by the bidder. 15. OTHERS (Non-Blacklisting) in notarized form.		
Note: 1) Bidder should furnish supporting documents. Otherwise, information given in the tender shall not be considered for evaluation.		

Enclose:

Yours faithfully,

1. Demand Draft No.
2. Date of issue
3. Name of Bank

Signature of Contractor

Full Name:

CHAPTER-XI

DRAWINGS

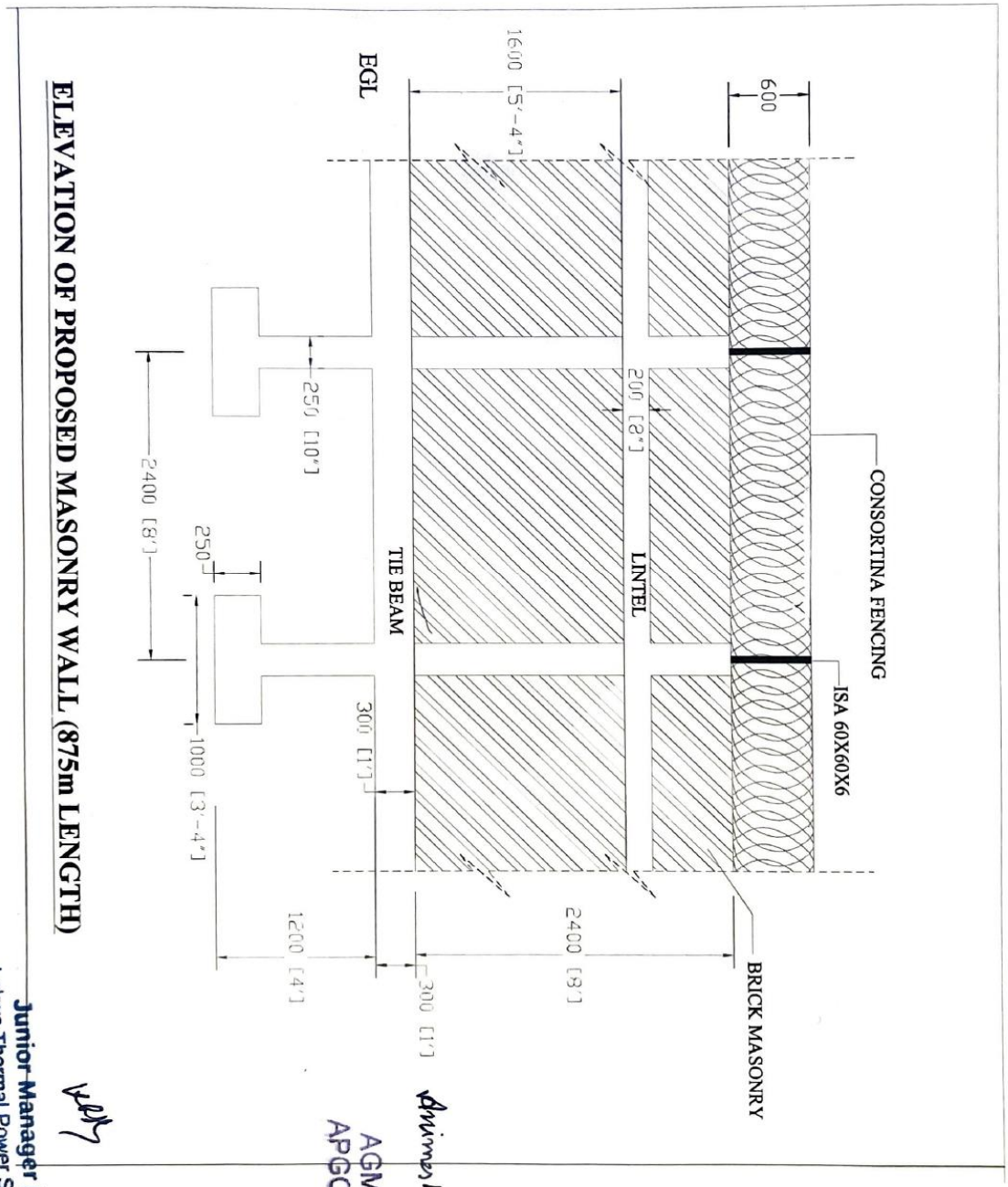

ELEVATION OF PROPOSED MASONRY WALL (875m LENGTH)

Animesh Saikia
AGM(C), LTPS,
APGCL, Maibella,

Junior Manager (C)
Lakwa Thermal Power Station
APGCL,Maibella,Pin:785689

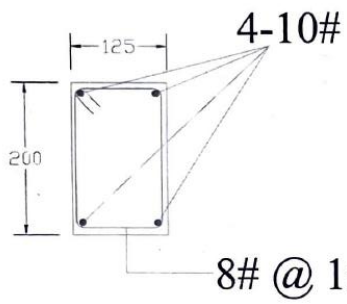

TYPICAL LINTEL SECTION

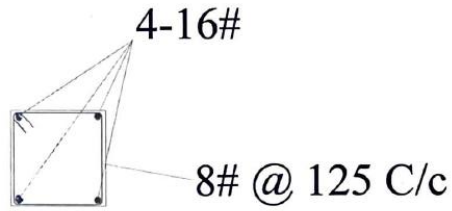

TYPICAL COLUMN SECTION

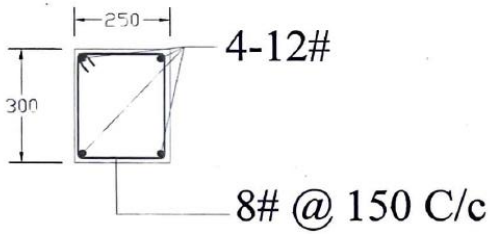

TYPICAL GRADE BEAM SECTION

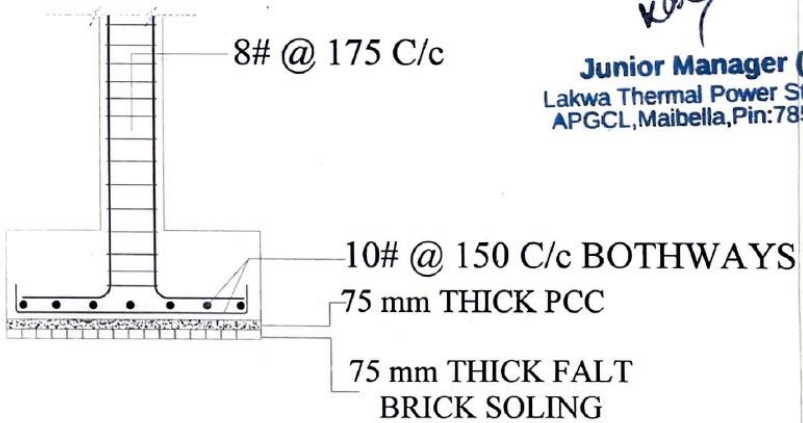

TYPICAL FOOTING SECTION

Junior Manager (C)
Lakwa Thermal Power Station
APGCL,Maibella,Pin:785689

Animesh Saikia
AGM(C), LTPS,
APGCL, Maibella,

DETAILING OF PROPOSED MASONRY WALL (875m LENGTH)

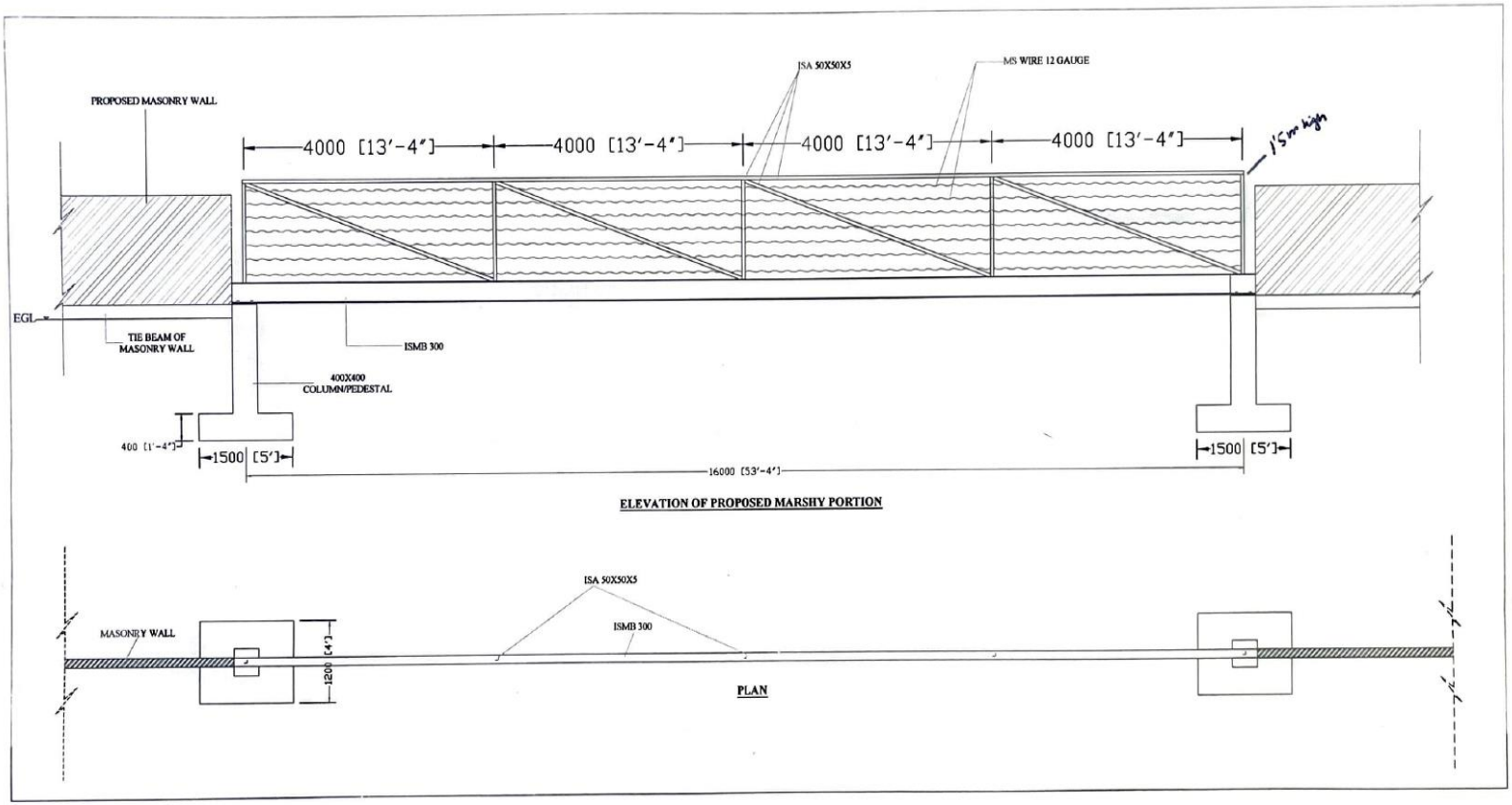

Animesh Saikia

AGM(C), LTPS,
APGCL, Maibella,

Junior Manager (C)
Lakwa Thermal Power Station
APGCL,Maibella,Pin:785689

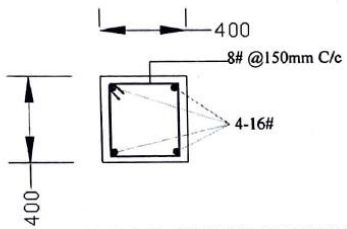

TYPICAL SECTION OF COLUMN/PEDESTAL

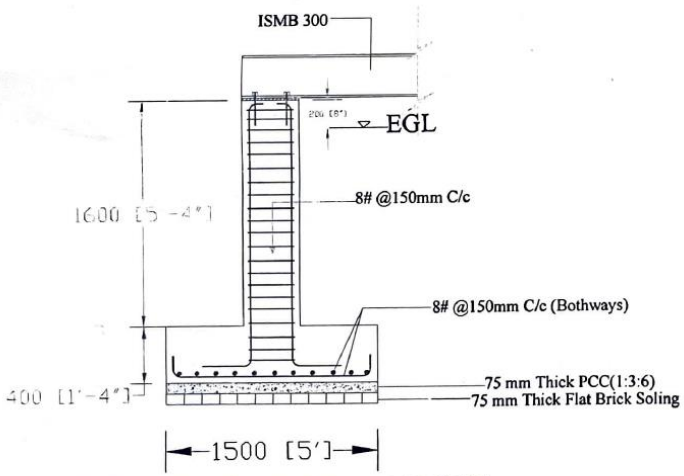

TYPICAL SECTION OF FOOTING

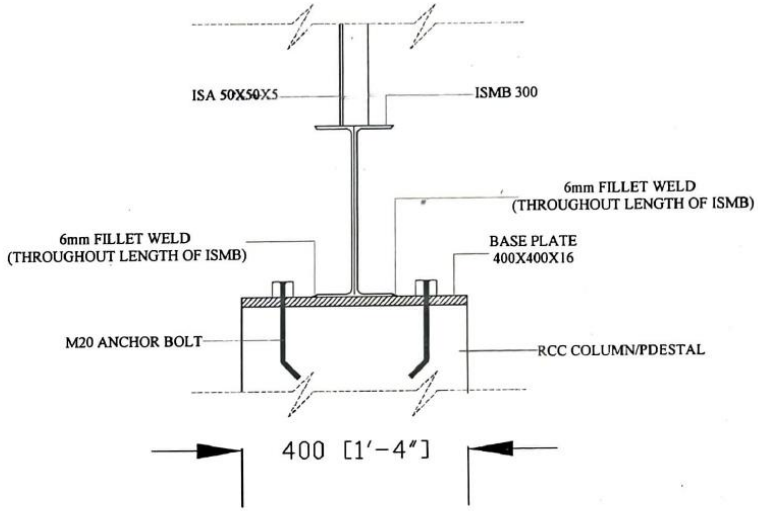

CONECTION OF STEEL WORK WITH RCC COLUMN/PEDESTAL

DETAILING OF PROPOSED MARSHY PORTION WALL (COLUMN & FOOTING AND STEEL CONCRETE CONNECTION)

Animesh Saikia
AGM(C), LTPS,
APGCL, Maibella,

Junior Manager (C)
Lakwa Thermal Power Station
APGCL,Maibella,Pin:785689

CHAPTER-XII

PHOTOGRAPHS OF THE SITE

Annexure-I

Format of Bank Guarantee for Bid Security/EMD

(BANK GUARANTEE ON NON-JUDICIAL STAMP PAPER OF Rs.100)

(To be on non-judicial stamp paper of appropriate value as per Stamp Act relevant to place of execution.)

Ref.....Bank Guarantee No…….....Date: ..... BID

SECURITY, BANK GUARANTEE FORMAT FOR TENDER/ NIT No.....

In consideration of the ..... [Insert name of the Bidder] (hereinafter referred to as 'Bidder') submitting the response to NIT inter alia for (NIT NO .....) for work "**Construction of riverside Boundary Wall at Lakwa Thermal Power Station, Maibella, Assam.**", in response to the NIT No…….....Dated..... issued by Assam Power Generation Corporation Ltd. (APGCL) considering such response to the NIT of..... [Insert the name of the Bidder] as per the terms of the NIT, the .....[insert name & address of bank] hereby agrees unequivocally, irrevocably and unconditionally to pay to APGCL at……. [Insert Name of the Place from the address of APGCL] forthwith on demand in writing from APGCL or any Officer authorized by it in this behalf, any amount up to and not exceeding Rupees..... [Insert amount as per Clause 3 of Chapter III] only, on behalf of M/s..... [Insert name of the Bidder].

This guarantee shall be valid and binding on this Bank up to and including .....[insert date of validity in accordance with Clause 3 of Chapter III of this NIT] and shall not be terminable by notice or any change in the constitution of the Bank or the term of contract or by any other reasons whatsoever and our liability hereunder shall not be impaired or discharged by any extension of time or variations or alternations made, given, or agreed with or without our knowledge or consent, by or between parties to the respective agreement.

Our liability under this Guarantee is restricted to Rs..... (Rupees in words only). Our Guarantee shall remain in force until ..... [Insert date of validity in accordance with Clause 3 of Chapter III of this NIT].

APGCL shall be entitled to invoke this Guarantee till ..... [Insert date which is 30 days after the date in the preceding sentence].

The Guarantor Bank hereby agrees and acknowledges that the APGCL shall have a right to invoke this BANK GUARANTEE in part or in full, as it may deem fit.

The Guarantor Bank hereby expressly agrees that it shall not require any proof in addition to the written demand by APGCL made in any format, raised at the above-mentioned address of the Guarantor Bank, in order to make the said payment to APGCL.
The Guarantor Bank shall make payment hereunder on first demand without restriction or conditions and notwithstanding any objection by …….. [Insert name of the selected Contractor] and/or any other person. The Guarantor Bank shall not require APGCL to justify the invocation of this BANK GUARANTEE, nor shall the Guarantor Bank have any recourse against APGCL in respect of any payment made hereunder.

This BANK GUARANTEE shall be interpreted in accordance with the laws of India and the courts at Assam shall have exclusive jurisdiction.

The Guarantor Bank represents that this BANK GUARANTEE has been established in such form and with such content that it is fully enforceable in accordance with its terms as against the Guarantor Bank in the manner provided herein.

This BANK GUARANTEE shall not be affected in any manner by reason of merger, amalgamation, restructuring or any other change in the constitution of the Guarantor Bank.

This BANK GUARANTEE shall be a primary obligation of the Guarantor Bank and accordingly APGCL shall not be obliged before enforcing this BANK GUARANTEE to take any action in any court or arbitral proceedings against the selected Contractor ,to make any claim against or any demand on the selected Contractor or to give any notice to the selected Contractor or to enforce any security held by APGCL or to exercise, levy or enforce any distress, diligence or other process against the selected Contractor.

The Guarantor Bank acknowledges that this BANK GUARANTEE is not personal to APGCL and may be assigned, in whole or in part, (whether absolutely or by way of security) by APGCL to any entity to whom APGCL is entitled to assign its rights and obligations.

Notwithstanding anything contained hereinabove, our liability under this Guarantee is restricted to Rs. ……. (Rupees in words only) and it shall remain in force until …… We are liable to pay the guaranteed amount or any part thereof under this Bank Guarantee only if APGCL serves upon us a written claim or demand.

Signature ……

Name……

Power of Attorney No……

For

----[Insert Name of the Bank] - Banker's Stamp and Full Address.

Dated this ……. day of …, 20….

Witness:

1. .....

Signature

Name and Address

2.....

Signature

Name and Address

Instructions for Furnishing Bank Guarantee

1. The Bank Guarantee by Bidders will be given on non-judicial stamp paper as per stamp duty applicable at the place where the tender has emanated. The non-judicial stamp paper should be in name of the issuing bank.

2. The Bank Guarantee by Bidder will be given from Nationalized Bank or Scheduled Bank of RBI only.

3. This bank guarantee/ all further communication relating to the bank guarantee should be forwarded to Bidder.

4. The full address along with the Telex/ Fax No. and email address of the issuing bank to be mentioned.

Note:

a. Non-submission of BID Security shall result into rejection of bid and no request from bidder, shall be entertained in this regard.

b. In case the bid is submitted by a Joint Venture, the bid security shall be in the name of the Joint Venture and not in the name of the Lead Partner or any other Partner(s) of the Joint Venture. Non-compliance of the same shall result into rejection of bid and no request from bidder, shall be entertained in this regard.

c. The bidders are requested to advise the Bank Guarantee issuing bank to comply with the following and ensure to submit, the receipt of the copy of SFMS message as sent by the issuing bank branch, along with the original Bank Guarantee in APGCL's tender issuing office:

The Bank Guarantee issued by the Bank must be routed through SFMS platform as per following details;

i. MT/IFN 760/MT/IFN 760 COV for issuance of Bank Guarantee.

ii. MT/IFN/ 760/MT/IFN 767 COV for amendment of Bank Guarantee.

The above message/intimation shall be sent through SFMS by the BG issuing bank branch to Axis Bank, Paltanbazar Branch, Account no: 375010200007573, IFS code-UTIB0000375, Branch address – Axis Bank Ltd. , Commercial Building, A.T. Road, Guwahati-781001, India.

Annexure-II

(To be filled up and submitted later by selected bidder prior to start of the work)

Format of Bank Guarantee for Performance Security

(Note: Performance Guarantee is to be submitted in Bank Guarantee as per the Clause 4 of Chapter III at respective times)

[To be on non-judicial stamp paper of Rupees One Hundred Only (INR 100/-) or appropriate value as per Stamp Act relevant to place of execution, duly signed on each page. Foreign entities submitting Bid are required to follow the applicable law in their country]

Reference No. ……. Bank Guarantee No. ……. Dated .....On stamp paper of Rs.100/-)

In consideration of the …… [Insert name of the Bidder] (hereinafter referred to as 'Contractor') submitting the response to NIT NO ..... for "**Construction of riverside Boundary Wall at Lakwa Thermal Power Station, Maibella, Assam.**", in response to the NIT dated..... issued by Assam Power Generation Corporation Ltd. (APGCL) considering such response to the NIT of .....[insert the name of the Contractor] (which expression shall unless repugnant to the context or meaning thereof include its executers, administrators, successors and assignees) and selecting the Contractor and issuing Letter of Award No .....to (Insert Name of Contractor) as per terms of NIT and the same having been accepted by the Contractor. As per the terms of the NIT, the ---------- [insert name & address of bank] hereby agrees unequivocally, irrevocably and unconditionally to pay to APGCL at [Insert Name of the Place from the address of APGCL] forthwith on demand in writing from APGCL or any Officer authorized by it in this behalf, any amount up to and not exceeding Rupees ……[Insert amount as per Clause 4 of Chapter III] only, on behalf of M/s …….. [Insert name of the Contractor]. This guarantee shall be valid and binding on this Bank up to and including.....[insert date of validity in accordance with Clause 4 of Chapter III of this NIT] and shall not be terminable by notice or any change in the constitution of the Bank or the term of contract or by any other reasons whatsoever and our liability hereunder shall not be impaired or discharged by any extension of time or variations or alternations made, given, or agreed with or without our knowledge or consent, by or between parties to the respective agreement.

Our liability under this Guarantee is restricted to Rs.....(Rs. (Words) only).
Our Guarantee shall remain in force until ..... [insert date of validity in accordance with Clause 4 of Chapter III]. APGCL shall be entitled to invoke this Guarantee till……. until [Insert date which is 6 (Six) months after the date in the preceding sentence].

The Guarantor Bank hereby agrees and acknowledges that APGCL shall have a right to invoke this BANK GUARANTEE in part or in full, is it may deem fit.

The Guarantor Bank hereby expressly agrees that it shall not require any proof in addition to the written demand by APGCL made in any format, raised at the above-mentioned address of the Guarantor Bank, in order to make the said payment to APGCL.

The Guarantor Bank shall make payment hereunder on first demand without restriction or conditions and notwithstanding any objection by..... [Insert name of the Contractor] and/or any other person. The Guarantor Bank shall not require APGCL to justify the invocation of this BANK GUARANTEE, nor shall the Guarantor Bank have any recourse against APGCL in respect of any payment made hereunder.

This BANK GUARANTEE shall be interpreted in accordance with the laws of India and the courts at Assam shall have exclusive jurisdiction.

The Guarantor Bank represents that this BANK GUARANTEE has been established in such form and with such content that it is fully enforceable in accordance with its terms as against the Guarantor Bank in the manner provided herein.

This BANK GUARANTEE shall not be affected in any manner by reason of merger, amalgamation, restructuring or any other change in the constitution of the Guarantor Bank.

This BANK GUARANTEE shall be a primary obligation of the Guarantor Bank and accordingly APGCL shall not be obliged before enforcing this BANK GUARANTEE to take any action in any court or arbitral proceedings against the selected contractor ,to make any claim against or any demand on the selected contractor or to give any notice to the selected contractor or to enforce any security held by APGCL or to exercise, levy or enforce any distress, diligence or other process against the selected Contractor.

The Guarantor Bank acknowledges that this BANK GUARANTEE is not personal to APGCL and may be assigned, in whole or in part, (whether absolutely or by way of security) by APGCL to any entity to whom APGCL is entitled to assign its rights and obligations.

Notwithstanding anything contained hereinabove, our liability under this Guarantee is restricted to Rs .....(Rs ..... only) and it shall remain in force until ..... We are liable to pay the guaranteed amount or any part thereof under this Bank Guarantee only if APGCL serves upon us a written claim or demand.

Signature ……

Name……

Power of Attorney No……

For

----[Insert Name of the Bank]-

Banker's Stamp and Full Address.

Dated this -- day of …….,20….

Witness:

1.....Si

gnature

Name and Address

2.....

Signature

Name and Address

Instructions For Furnishing Performance Bank Guarantee

1. The Bank Guarantee by Bidders will be given on non-judicial stamp paper as per stamp duty applicable at the place where the tender has emanated. The non-judicial stamp paper should be in the name of the issuing bank.

2. The Bank Guarantee by Bidder will be given from Nationalized Bank or Scheduled Bank of RBI only.

3. This bank guarantee/ all further communication relating to the bank guarantee should be forwarded to APGCL.

4. The full address along with the Telex/ Fax No. and email address of the issuing bank to be mentioned.

Note :

a). In case the bid is submitted by a Joint Venture, the bid security shall be in the name of the Joint Venture and not in the name of the Lead Partner or any other Partner(s) of the Joint Venture. Non-compliance of the same shall result into rejection of bid and no request from bidder, shall be entertained in this regard.

b) . The bidders are requested to advise the Bank Guarantee issuing bank to comply with the following and ensure to submit, the receipt of the copy of SFMS message as sent by the issuing bank branch, along with the original Bank Guarantee in APGCL's tender issuing office:

The Bank Guarantee issued by the Bank must be routed through SFMS platform as per following details;

i. MT/IFN 760/MT/IFN 760 COV for issuance of Bank Guarantee.

ii. MT/IFN/ 760/MT/IFN 767 COV for amendment of Bank Guarantee.

The above message/intimation shall be sent through SFMS by the BG issuing bank branch to Axis Bank, Paltanbazar Branch, Account no: 375010200007573, IFS code-UTIB0000375, Branch address – Axis Bank Ltd. , Commercial Building, A.T. Road, Guwahati-781001, India.

c) APGCL reserves the right to modify/ replace the above format with prior intimation to the selected bidder before issue of work order/ purchase order.

Annexure-II1

Certified that in discharging the outward tax liability by ITCs all the provisions of GST Acts, Rules and notifications made therein are complied with including the following provisions:

- Goods and services relating to ITCs have actually been received.
- ITCs has been availed strictly in compliance with provisions under Section 16(2) (aa).
- Tax relating to ITCs has actually been paid to the government.
- No ITCs, though reflected in GSTR2B, availed if it is restricted by Section 38(2)(b).
- No ITCs, though reflected in GSTR2B, availed if it is blocked by Section 17(5).
- No ITCs in excess of input goods and services utilized actually in the projects/ works, are utilized to discharge the liabilities.
- In no case, utilization of ITCs in discharging liabilities exceeds the upper limit as prescribed by contractee department.
- The above facts are true to the best of my knowledge.

Signature & Seal of contractor

GOVERNMENT OF ASSAM
FINANCE (TAXATION) DEPARTMENT
JANATA BHAWAN, DISPUR, GUWAHATI-6
Email - eoffice.fintax@assam.gov.in,/financetaxation@yahoo.in

eCF No.803347/20 Dated Dispur 11-07-2026

From : Smti. Sanghamitra Bhagawati, ACS,
Deputy Secretary to the Govt. of Assam,
Finance (Taxation) Department

To : 1) The Senior Most Secretary, Public Works (Building & NH) / Public Works (Health & Education) / Public Works (Roads) / Irrigation / Water Resource / Public Health Engineering Department, Janata Bhawan, Dispur, Guwahati - 781006.

2) The Managing Director,
Assam Electricity Grid Corporation Limited (AEGCL) /
Assam Power Generation Corporation Limited (APGCL)/
Assam Power Distribution Company Limited (APDCL).

Subject : Guidelines regarding determination of maximum permissible Input Tax Credit (ITC) utilization ratios in respect of works contracts executed under Works Departments and Public Sector Undertakings of the Government of Assam.

Ref : Record of discussion of the meeting with various Works Department held on 25th June 2026 (Copy *enclosed*).

Sir,

With reference to the subject cited above, I am directed to state that with a view to ensuring uniformity, transparency and proper verification of Input Tax Credit (ITC) utilization by contractors executing Government works, the following instructions shall be complied with by all concerned Works Departments:

1. Maximum acceptable ITC utilization ratios

#	Department	Type of work	Key inputs /	*Maximum*

			process involved	**acceptable ITC utilisation ratio**
i.	Public Works Department – Building, Health & Education	RCC Building	• Civil work (cement, brick, sand, Steel, Stone chips, Tiles, paint, etc.) • Electrical work • Plumbing • Water supply • Mechanical	70%
		Stadiums	• Civil work (cement, brick, sand, Steel, Stone chips, Tiles, paint, etc.) • Electrical work • Plumbing • Water supply • Site development	55%
(ii)	Public Works Department – Roads	Bituminous roads or Paver blocks	• Road work (bitumen/ paver block, gravel, sand, etc.)	30% (if contractor has own quarry) 40% (if contractor does not have own quarry)
			• ICBP Road work (ICBP, gravel, sand, Road Furnisher etc.)	40% (if contractor has own quarry) 50% (if contractor does not have own

				quarry)
			• Drain work (cement, sand, chips, steel, etc.)	60%
		Build-up girder (BUG)/ Steel Bridge (primarily over water bodies)	• Steel • Cement • Chips • Sand • Gravel	75%
		Fly Overs / RCC Bridge	• Cement • Steel • Chips • Sand • Gravel • Others	70%
		Mixed Contracts (Road and Bridge/Road and Drain etc)	As applicable	As per weightage of the component in the estimate
(iii)	Department of Irrigation	Flow Irrigation Scheme (FIS)	• Concrete work (cement, steel, sand) • Earthwork • Mechanical work (steel plates, channel) • Solar/Electrical work	60%
		Lift Irrigation System (LIS)	• Concrete work • Mechanical work • Solar/Electrical work • Distribution	60%

			System	
		Tube Wells	• Concrete work • Pipe network • Pump (solar or electrical) • Gravel	45%
(iv)	Assam Electricity Grid Corporation Limited (AEGCL)	EHV Grid Su-Station	• Material supply • Freight & Insurance • Erection and civil works	80%
		EHV Transmission Lines	• Material supply • Freight & Insurance • Erection and civil works	80%
(v)	Assam Power Generation Corporation Limited (APGCL)	Hydro Project	• Civil work • Electro-Mechanical work • Hydro-mechanical work • Colony / Roads	70%
		Thermal Project	• Civil work • Electro-mechanical	75%
		Solar Projects	• Panel Supply • Civil work	80%
(vi)	Assam Power Distribution Company Limited (APDCL)	Construction of 33kV Sub-Station/ DTR Substation	• Material Supply for Electrical/Civil Works • Fright & Insurance	80%
			• Poles (PSC/Steel	

		Power Distribution Network (LT/HT)	Tubuler Pole), GI Channel, GI Angle, LA, Hardware Fittings • Conductor, AB Cable/ MVCC Covered Conductor	80%
(vii)	Water Resources Department	Embankment	• Earthwork • Geo-bags • Tarping works	30%
(viii)	Public Health Engineering Department	Water supply	• Civil work (steel, cement, pipes) • Electrical work (transformer, cable work) • Mechanical Work (tubewell, pumps)	70%

I. Contractors utilizing ITC beyond the prescribed benchmark shall be identified and verified by the Procuring entity for verification without fail.

II. Where ITC claims are found genuine after verification, no further action shall be taken; otherwise appropriate action shall be initiated under GST law contractual provisions and Assam Public Procurement Framework..

III. Where fake ITC/bogus billing is detected or payment of inputs in cash is found, the concerned Works Department shall take action including blacklisting/debarment as permissible. Suitable tender clauses shall be incorporated in current and future tenders by the Procuring Entity

IV. For bituminous works, procurement shall be made only from authorized empaneled vendors.

V. Applications of private bitumen vendors shall be vetted by PWD (Roads) after verification by GST department. PWD (Roads) shall ensure an adequate panel of authorized vendors and incorporate suitable tender provisions. Empanelment shall be cancelled if GST norms not followed by vendors.

2. The above instructions shall be implemented by all concerned Departments/Organizations subject to the following conditions:

I. A suitable provision may be incorporated to relax the prescribed maximum permissible ITC utilization ratio in exceptional cases where a genuine and justifiable requirement exists, particularly where the labour component of the work is substantially outsourced.

II. It shall be clearly stipulated that the prescribed maximum permissible ITC utilization ratio represents only the upper ceiling and shall not be construed as the standard or automatic entitlement. The concerned Procuring entity shall determine the admissible ITC utilization ratio on a case-to-case basis after due examination and shall ensure that the prescribed ceiling is not misused.

III. The concerned Procuring entity shall obtain a certificate from the contractor confirming compliance with the applicable provisions of the GST Acts, Rules and other relevant statutory requirements. To implement this, a standard format is also *enclosed* for ready reference.

IV. The prescribed maximum permissible ITC utilization ratios shall be incorporated in the bid documents and form part of

all future contracts. Existing contracts may also be suitably amended, wherever legally permissible. However, provision may be kept for relaxation in exceptional cases where genuine and justifiable reasons exist.

V. Tender/contract documents shall contain appropriate provisions for debarment or blacklisting of contractors, after following due process, where they are found to have availed fake ITC, indulged in bogus billing, payment of inputs in cash or committed any other serious violation of the Assam GST Framework or Procurement Framework.

This has the approval of the Competent Authority.

Yours faithfully,

Encl : As stated above

Digitally signed by Sanghamitra Bhagawati
Date: 11-07-2026 14:22:11

Deputy Secretary to the Govt. of Assam,
Finance (Taxation) Department

Memo eCF No.803347/20-A Dated Dispur 11-07-2026

Copy for information and necessary action to:

1. The Commissioner of Taxes, Assam, Kar Bhawan, Dispur, Guwahati – 781006.

2. The Staff Officer to Chief Secretary, Assam, Lok Sewa Bhawan, Dispur, Guwahati – 781006.

3. OSD to the Hon'ble Finance Minister, Assam, Janata Bhawan, Dispur, Guwahati – 781006, for kind appraisal of Hon'ble Minister.

4. PS to the Additional Chief Secretary to Chief Minister, Assam, Lok Sewa Bhawan, Dispur, Guwahati – 781006, for kind appraisal of Additional Chief Secretary.

5. PS to the Sr Most Secretary to the Govt. of Assam, Finance